SIERRA
CABLE LASHER

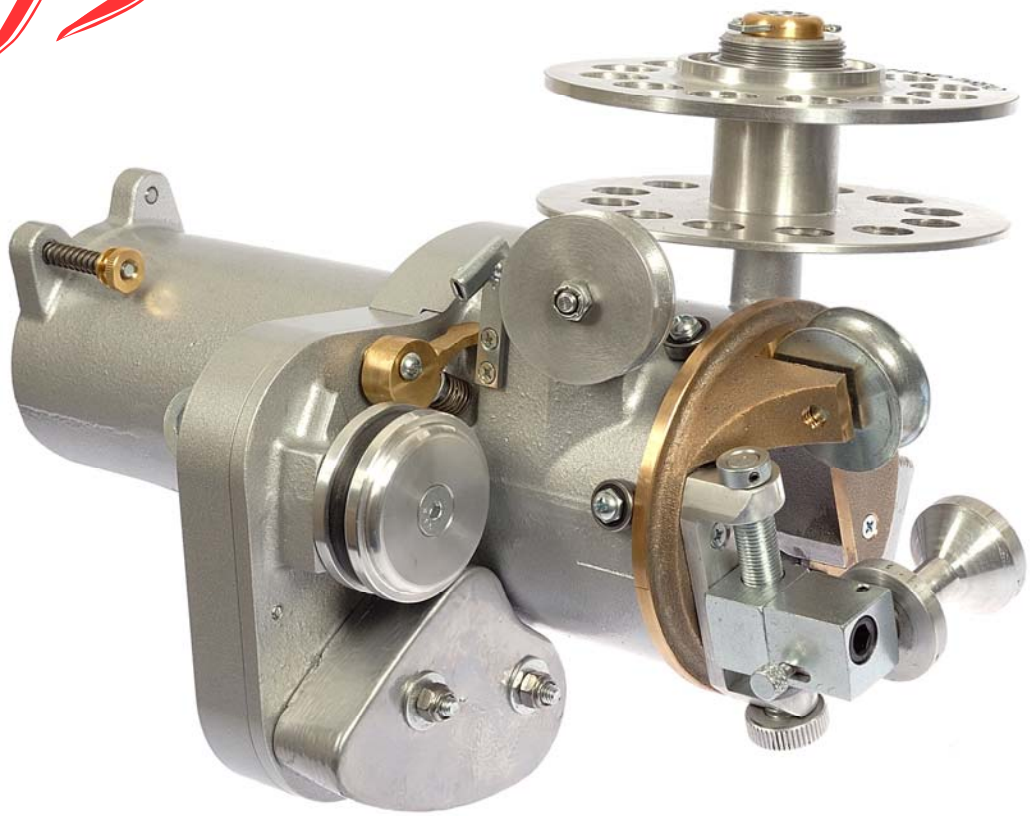

71500
Sierra Cable Lasher
Operation and Maintenance

All rights reserved. No part of this publication may be copied, reproduced or transmitted in any form whatsoever without the written permission of General Machine Products (KT), LLC

General Machine Products (KT), LLC • 3111 Old Lincoln Hwy • Trevose, PA 19053 • USA
TEL: +1-215-357-5500 • FAX: +1-215-357-6216 • www.gmptools.com

REVISION HISTORY:

Rev No.	Date	Details	Author
01	05-2012	Original issue	A.Konschak
02	02-2013	Revised format for clarity	A. Konschak
03	07-2017	Updated company name	A. Konschak

CONTENTS

APPENDICES

1.0 INTRODUCTION

Founded by engineer George M. Pfundt in 1936, GMP started operations in a downtown Philadelphia building as a specialty machine shop doing work for the local Bell Telephone company and for the electric utility company. GMP expanded to a production shop after landing a contract with Western Electric Company and, subsequently, forming a close relationship with Bell Telephone Laboratories in Murray Hill, N.J., which enabled it to manufacture prototypes of products for experimental use within the Bell System.

Having outgrown the original factory building, the company built a 100,000 square foot plant in Trevose, PA (a Philadelphia suburb) and moved there in 1957. Today GMP is recognized as a premier worldwide supplier of specialty tools and equipment for the outside plant marketplace. The company's products are known for their robust design and durability to withstand many years of frequent use.

2.0 SAFETY INSTRUCTIONS

IMPORTANT PRECAUTIONS

⚠ Advance planning for safety should include the following observations:

- Vehicle and pedestrian safety
- Proper strand tensioning, grounding and bonding
- Proper pole line guying and anchoring
- Potential line obstructions (trees, limbs, wires)
- Adequate clearances and separations for other utilities
- Avoid shaking power lines while lashing
- Lashing machine in good working order
- Inspect and use personal safety gear
- Use a hand line for lifting and lowering of equipment
- Use the bridle rope to tether the lasher during span transfer

3.0 GENERAL DESCRIPTION

General Information:

The GMP Sierra pull type cable lasher weighs just 19 pounds (8.6 kg) and single lashes one or multiple cables from drop wire size to a combined 1 15/16" (50 mm) outside diameter. Because the lashing wire pays out from a friction wheel engaged whenever the lasher is pulled forward, no strand traction is needed.

This lasher is a piece of precision equipment. Treat it as such. Keep the lasher, operating manual and accessories in the protective storage chest after use. This measure will prolong the useful life of your lasher.

4.0 SPECIFICATIONS

Lasher Weight: 19 lbs (8.6 kg)
Dimensions: 15" long x 10" wide x 8" high (380 mm x 254 mm x 203 mm)
Capacity: Lashes cable from drop wire size to 1 15/16" (50 mm) outside diameter on 3/16" to 1/2" (5mm - 13mm) strand.
Capabilities: Single lashes cable up to 1 15/16" (50 mm) .
It is compatible with all standard size coils of lashing wire.
.038 x 1600
.045 x 1200
.061 x 650
.065 x 450

5.0 LAYOUT

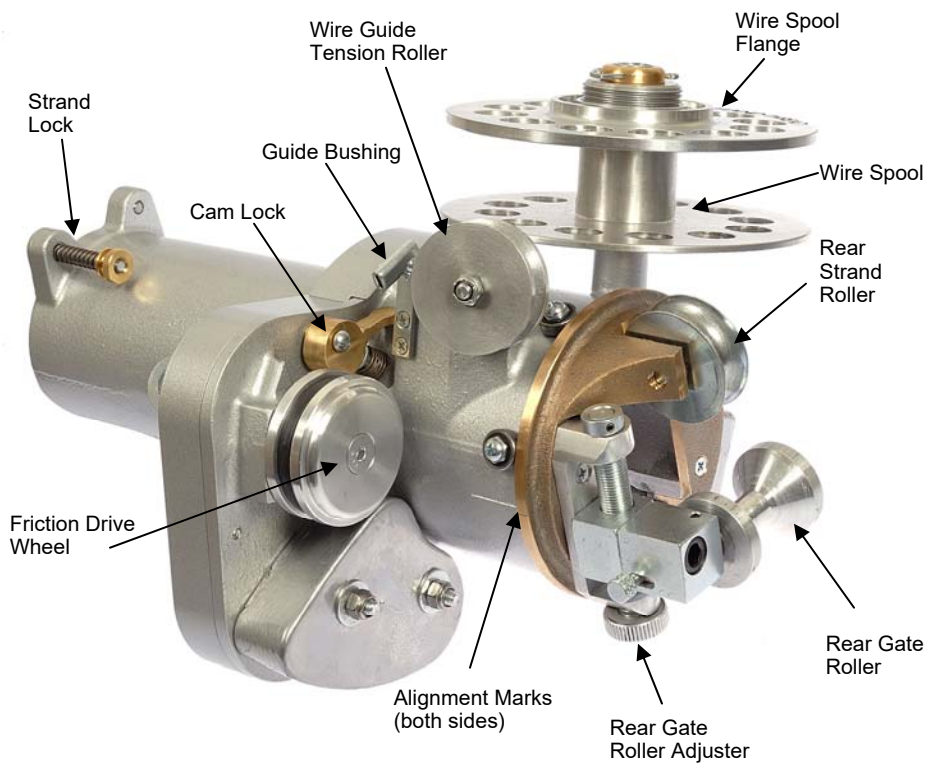

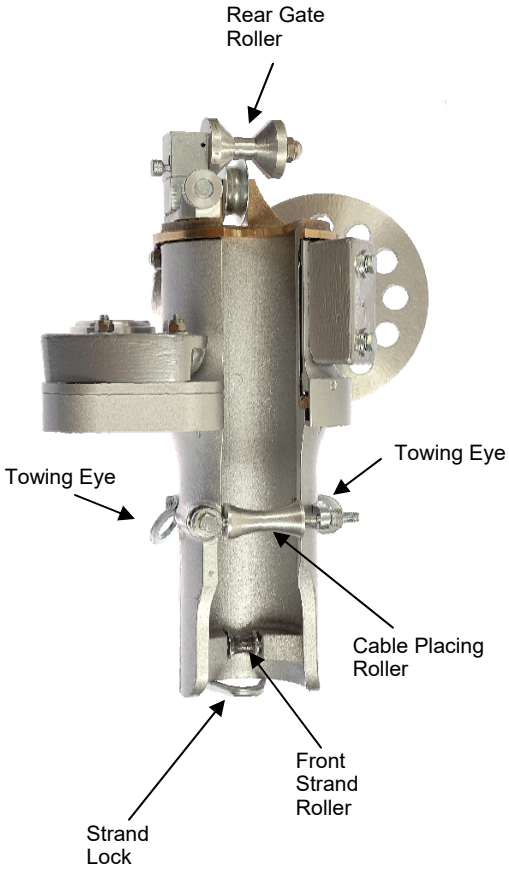

6.0 OPERATION PROCEDURE

1. Loading the Wire Spools on the Lasher

A. Remove the wire spool flange from the machine by turning it clockwise. This has a left hand thread. Carefully cut and remove two of the **(a)** four coil bindings on opposite ends. Take care not to nick the wire. Rotate the remaining **(b)** binding heads on both ties to the edge of the coil.

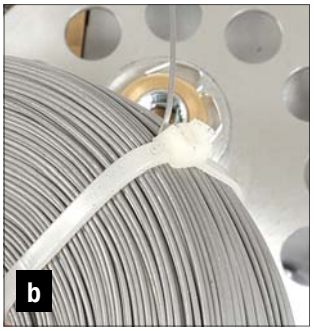

B. Cut the loop off of the end of the inside and outside of the wire. Pull off about 3' (1m) of wire from the **outside** end of the coil. Place the **(c)** coil on the exposed hub so the free end pays out counterclockwise. Replace the wire spool flange **(d)** loosely by turning it in a counter clockwise direction.

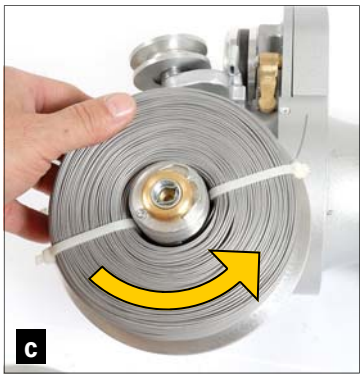

C. Feed the loose end of the lashing wire thru the guide bushing.

D. Circle the wire around the friction drive wheel about 3/4 turn.

E. Wrap the wire around the wire guide tension roller once to secure the wire and prevent it from unraveling while moving it into place on the strand for lashing.

F. Cut and remove the two remaining coil bindings and securely tighten the wire spool flange turning CCW.

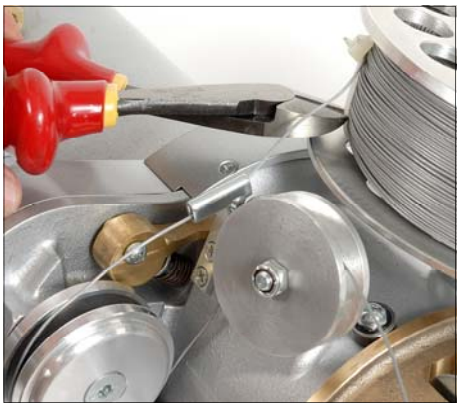

6.0 OPERATION PROCEDURE

2. Preparing the Sierra lasher for Operation

A. Open the strand lock **(a)**, cable placing roller **(b)** and the rear gate roller **(c)**.

B. Attach one side of the towing bridle to either of the two towing eyes on the lasher.

C. Place the lasher on the strand.

D. Attach (tether) the other end of the towing bridle to the strand to prevent the lasher from accidentally falling.

E. Close the strand lock, cable placing roller and the rear gate roller . (see above) Insure that the stand is captured by the stand lock . Ensure that the cable lifting & rear gate roller is under the cable. Adjust the rear gate roller so that there is 3/8" (10mm) clearance between the cable and the strand.

F. Pull out and secure the wire with a lashing wire clamp. (see appendix 1 for important details on properly attaching the wire to the clamp.)

G. Remove the towing bridle from strand and attach it to the 2nd towing eye on lasher. Attach tow line to the towing bridle.

H. Release the Cam Lock enabling the lasher to spin.

I. Pull the lashing machine down the line.

6.0 OPERATION PROCEDURE

3. Termination Of Lashing Wire

A. Once you've reached the end of the pull, while maintaining tension on lashing wire, temporarily clamp the wire with a Lashing Wire Grip Tool .

B. Rotate the lasher to align the 2 marks on the body and the end plate

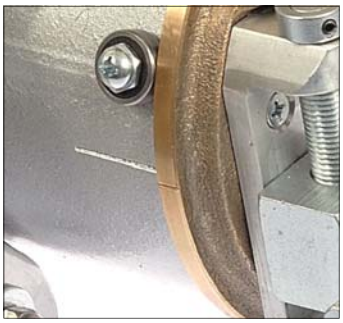

C. Engage the Cam Lock to lock the barrel open and prevent the lasher from spinning.

D. Pull about 3' (1m) of wire off the lasher and make 2 turns around the wire tension roller to prevent the coil from unraveling. Cut the wire ahead of the wire guide tension roller.

E. Attach (tether) one end of the towing bridle to the strand to prevent the lasher from accidentally falling.

F. Open the strand lock, cable placing roller and the rear gate roller and remove the lasher. Remove towing bridle from the strand and secure the lasher. Terminate the lashing wire with a lashing wire clamp. (See appendix 1 for important details on properly attaching the wire to the clamp). Remove the lashing wire grip.

6.0 OPERATION PROCEDURE

4. Transferring the Sierra Around a Pole

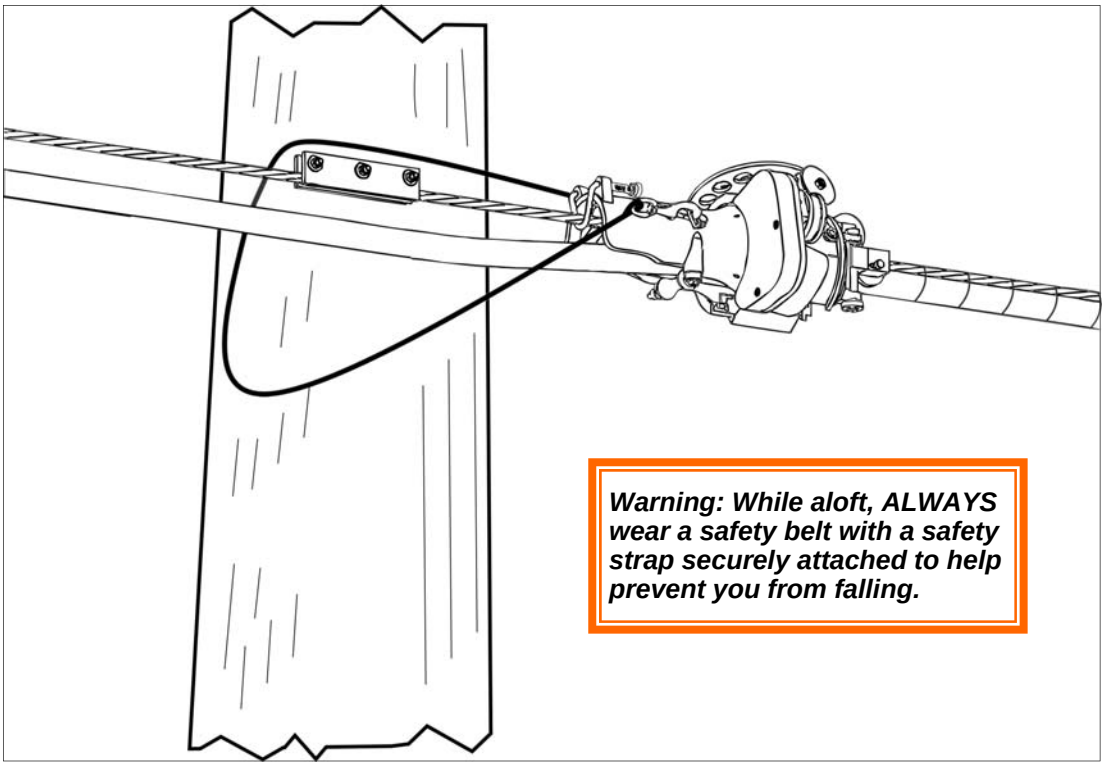

Transferring your lasher around a pole

When you need to move your Sierra lasher around a pole or other obstruction, follow these steps.

1. Before doing anything, make sure you are working from a secure perch where you can safely move your Sierra lasher with out overreaching. This is extremely important.
2. Clamp the lashing wire to the strand.
3. Pull a length of lashing wire from the Sierra lasher so you can terminate it with a clamp or continue lashing past the obstruction. *See appendix 1 for more information on terminating lashing wire.*
4. Attach one of the lasher bridle snap hooks to a lasher towing eye on the front of the machine.
5. Now pass the bridle under the strand, past the obstruction and attach the other snap hook to another lasher towing eye.
6. Open the front strand lock.
7. Open the rear gate roller making sure it is fully open.
8. Open the cable placing roller.
9. Carefully lift the lasher off the strand and move it over to the strand on the other side of the obstruction. If you accidentally drop the lasher while making this transfer, the bridle assembly will keep the lasher from falling to the ground.

7.0 MAINTENANCE AND SERVICING

Monthly Lubrication Points and Adjustments

G Grease

Use a quality white lithium grease like a CRC 5037

Ensure that there is a light coating of grease on all surfaces where the aluminum body contacts and rotates around the brass end plate and the ring gear.

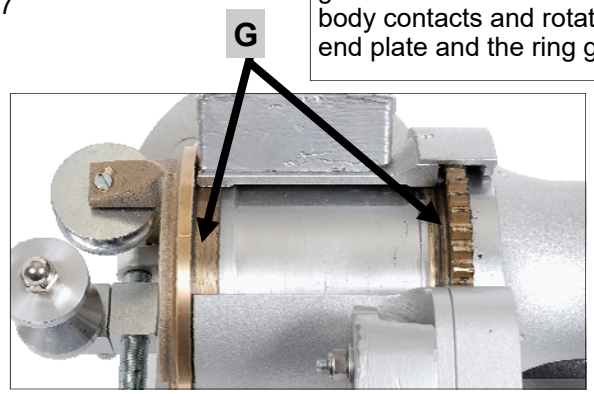

Oil

Use a clean 10w automotive type oil

⚠ ♦Do not over lubricate.
♦Keep oil and grease away from the friction drive wheel.
♦Wipe off any excess oil from your lasher afterwards.

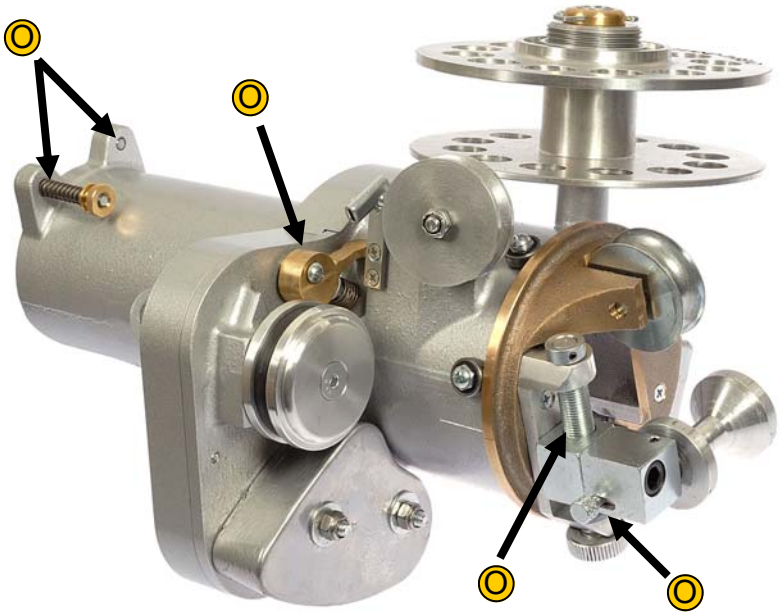

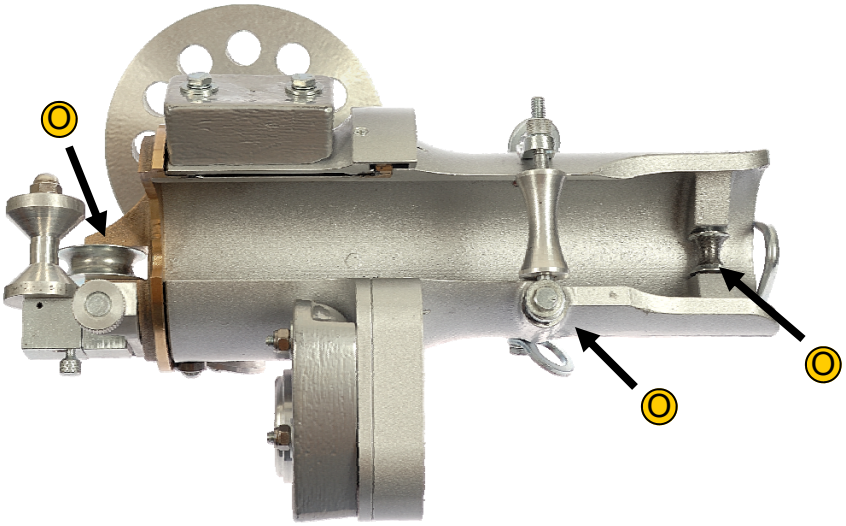

WIRE SPOOL DRAG BRAKE ADJUSTMENT

The wire spool drag brake is adjusted by a 3/16” hex adjusting screw located in the center of the spool’s spindle. This can be adjusted if you find the spool looses its slight drag. To adjust, insert hex wrench into center of wire spool spindle, tighten brake only enough so wire spool will not turn freely when loaded with a full coil of wire. This adjustment does not need to be done each time you load the lasher with wire.

8.0 TROUBLE SHOOTING

The lashing wire won't pay out: This indicates the wire isn't threaded properly. Refer to "Loading Wire Spools On the Lasher" in section 6.0.

Note: if you are unable to achieve positive drive, the lashing wire may need to be threaded twice around the friction wheel.

The wire jumps off of the wire guide tension roller: This indicates the lashing wire is improperly threaded. Refer to "Loading Wire Spools On the Lasher" in section 6.0.

The lasher draws back and loosens lashing wire: just pull lasher forward so the wire will tighten.

If you need any parts or repairs: contact

General Machine Products
3111 Old Lincoln Hwy
Trevose, PA 19053 • USA
TEL: +1-215-357-5500 • FAX: +1-215-357-6216
WEB: http://www.gmptools.com
EMAIL: info@gmptools.com

Lashing Wire Clamp Installation

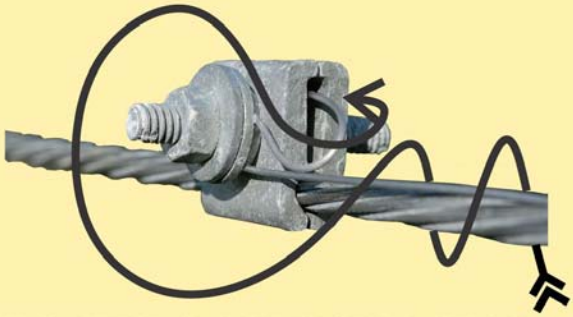

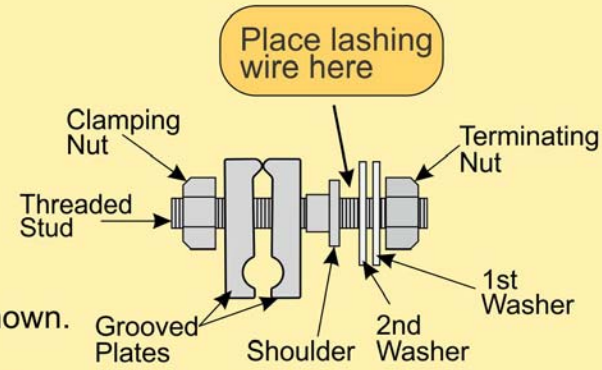

LASHING WIRE CLAMP INSTALLATION

1. Orient groove of clamp plates over strand as shown.
2. Cross lashing wire over top of strand 2 wraps **following the lay of the strand**. Thread it between the shoulder and the 2nd washer. Then wrap 1/2 turn around stud. **Do not wrap lashing wire 360° around stud and avoid pinching lashing wire which may cause premature failure.**
3. Tighten nut.
4. Tuck free end of lashing wire into clamp to prevent injury.
5. If over-lashing, repeat steps 2 and 3 except place second lashing wire between two flat washers.

Caution

Failure to terminate lashing wire properly **will** result in premature failure.

APPENDIX 2

Stainless Steel Lashing Wire Recommendations

Stainless Steel Lashing Wire is used in your lasher to lash an aerial cable or combination of cables to a supporting strand.

GMP lashing wire uses a specially controlled annealing process yields a uniform, fine grain structure throughout wire length and cross section for best results.
The wire Is available in a 430, 302, and 316 stainless steel alloy and is packaged as 6 coils per carton for your ordering convenience.

Type 430 Stainless

- Low carbon, 17% chromium wire
- Suitable for general use and in ordinary atmospheric exposure
- Will acquire only a dark surface stain
- Specifically not recommended for use within 25 miles of salt water or industrial operations which emit pollutants

Type 302 Stainless

- 18% chromium, 8% nickel analysis
- This wire has excellent resistance to corrosion from industrial atmospheres
- Its higher tensile strength and breaking load are an added benefit
- A .038 in. diameter Type 302 wire provides strength equal to a .045 in. type 430 wire with better ductility (easier bending and unwinding) and better elongation (less chance of wire breakage from stress)

Type 316 Stainless

- Modified 18-10 analysis containing approximately 2.5% molybdenum
- More resistant to the corrosive action of most chemicals, including chlorides and sulfides, than any other wire
- Particularly resistant to pitting and pin hole corrosion of the kind commonly caused by salt spray
- Its use provides the best insurance against failure under the most severe atmospheric conditions

P/N	Alloy	Dia.	Ft. Coil	Mtr. Coil	Wt. Coil	Coil Dia.	Coil Width	Coil Pkg.
71530	430	.045	1200	365.8	6.5 lbs.	5.38 in.	1.81 in.	6
71532	430	.065	450	137.2	5.3 lbs.	5.50 in.	1.69 in.	6
71533	302	.045	1200	365.8	6.3 lbs.	5.38 in.	1.81 in.	6
71534	316	.045	1200	365.8	6.4 lbs.	5.38 in.	1.81 in.	6
71535	302	.038	1600	487.7	6.3 lbs.	5.38 in.	1.81 in.	6
71540	316	.061	650	198.2	6.3 lbs	5.50 in.	1.81 in.	6
71541	316	.065	450	137.2	5.3 lbs.	5.50 in.	1.69 in.	6

APPENDIX 3

Accessories

D Lashing Wire Clamp

Perfect for temporary and permanent terminations or grounds, this all steel clamp lets you securely attach two lashing wires or #6 ground wire on any size strand from 1/4 in. to 7/16 in. (6-11 mm) diameter.

P/N 07886 Weight: 15 lbs./100 per carton

Lashing Wire Grip

A screw type grip used to temporarily fasten lashing wire under tension before placing a permanent clamp like our D or E Lashing Wire Clamps.

P/N 08605 Weight: 10 oz. (.28 kg)

Cable Block Pusher

Pushers lock onto the strand and push the cable blocks out of the way of the lasher during the cable lashing process. These are especially useful when lashing multiple cables to allow space between the first cable block and the lasher.

P/N 70431 Weight: 1.8 lb. (.85 kg)

73305 Cable Block

This block is used to support one cable up to 1" (25.40 mm) on new 1/4" (6.35 mm) strand. The high strength aluminum frame has a spring-loaded steel pin that keeps it locked on the strand & the cable on the nylon roller.

P/N 73305 Weight 4 oz. (.113 kgs)

Clip-On Cable Block

This tempered spring steel block is used to support cable up to 1" (2.54 cm) during cable pull-out.

P/N 87265 Weight: 11 lbs. (5 kgs) / package

10701 Cable Block with Rubber Roller

This economical block has a rubber roller & is used for new strand & over-lash work. Can accommodate up to a 2" (5 cm) cable

P/N 10701 Weight 2 lbs. (.907 kgs)

GMP • 3111 Old Lincoln Hwy • Trevose, PA 19053 • USA
TEL: +1-215-357-5500 • FAX: +1-215-357-6216 • www.gmptools.com